Leiterplatten-Layout Vorschlag für SMT
PCB-Layout Proposal for SMT

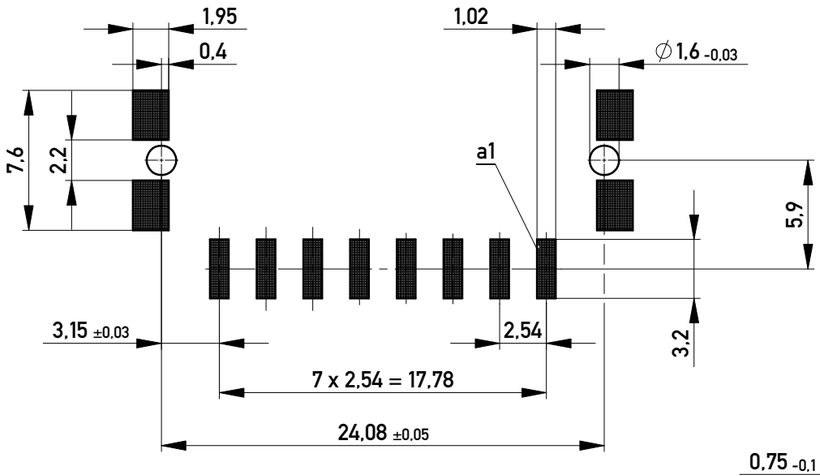

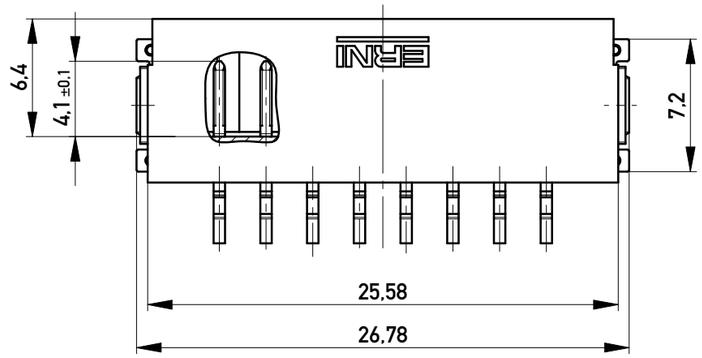

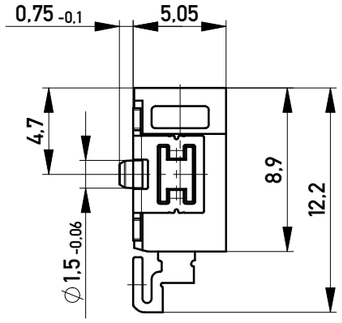

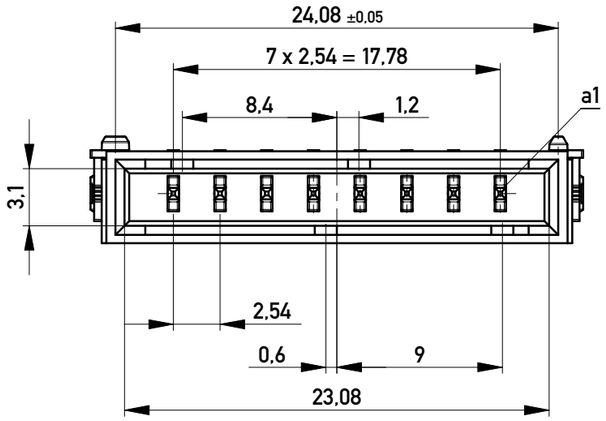

Anforderungsstufe 1
Performance Level 1

Kontaktbereich vergoldet
Mating Area gold plating

Anschlussbereich verzinnt 4-6 µm
Terminal Area 4-6 µm tin plating

Koplanarität der Anschlüsse ≤ 0,1 mm
Coplanarity Area of Termination ≤ 0,1 mm

Verpackt im Gurt nach DIN IEC 60286-3
Tape on Reel Packaging according to DIN IEC 60286-3
Verpackungseinheit: 440 Stück
Packaging unit: 440 pcs

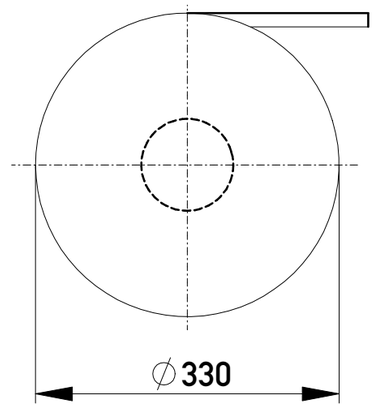

Abspulrichtung - *Reel off Direction*

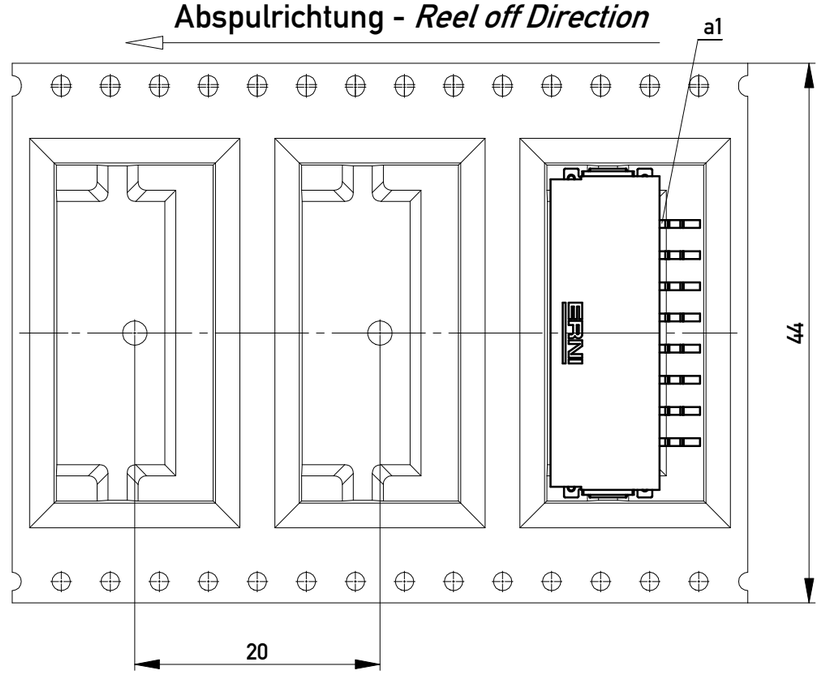

Copyright by ERNI Production GmbH & Co. KG
Proprietary notice pursuant to ISO 16016 to be observed.

Information: Codierung schwarz - *coding black*	Tolerances All Dimensions in mm	Scale 3:1	
All rights reserved. Only for Information. To ensure that this is the latest version of this drawing, please contact one of the ERNI companies before using.	Subject to modification without prior notice. Drawing will not be updated.	Designation M 2,54 SRC-A, 8-polig	
b 03.11.2015 Index Date	www.ERNI.com	104603880001	K A3
		Class SRCA	